Model Question Paper with effect from 2023-24 (CBCS Scheme)

USN | | | | | | | | | | |

Fifth Semester B.E. Degree Examination
Artificial Intelligence

TIME: 03 Hours **Max. Marks: 100**

Note: Answer any FIVE full questions, choosing ONE full question from each module.

Q. No.		Questions	Marks	BL
		Module 1		
1	a.	Define Artificial Intelligence. Explain the foundations of AI in detail.	10	CL2
	b.	Discuss the PEAS specification of Biometric Authentication System	10	CL3
		OR		
2	a.	Differentiate: i. Fully observable vs partially observable ii. Single agent vs Multiagent iii. Deterministic vs Stochastic iv. Static vs Dynamic	10	CL2
	b.	Give PEAS specification for Automated Taxi Driver	10	CL3
		Module 2		
3	a.	Explain five components and well-defined problem. Consider an 8-puzzle problem as an example.	10	CL2
	b.	In detail elaborate with neat diagram, the state space for the vacuum world. Links denote actions: L = Left,R= Right,S=Suck.	10	CL3
		OR		
4	a.	For the graph given below apply BFS and DFS Search algorithm. 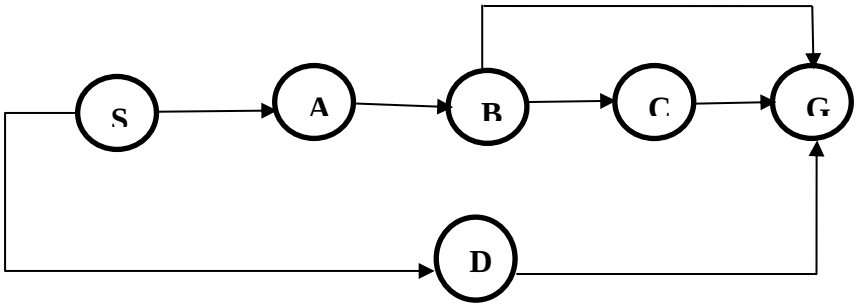 	10	CL3
	b.	Explain Depth Limited Search and Iterative Deeping DFS Search with an example.	10	CL2
		Module 3		
5	a.	In the below graph, find the path from A to G. Using Greedy Best First search and A* search algorithm. The values in the table represent heuristic values of reaching the goal node G pass current node.	10	CL3

notesforvtu.in

		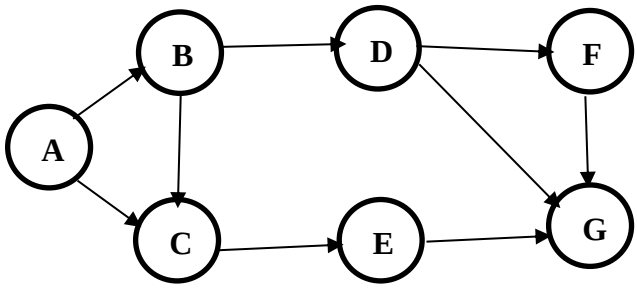 A 5 B 6 C 4 D 3 E 3 F 1 G 0		
	b.	Explain the Knowledge–based agents with an algorithm and explain the TELL and ASK functions used for same.	10	CL2
OR				
6	a.	Apply the A* search to find the solution path from a to z. Heuristics are with nodes, and cost is with edges. Write all steps as well as open and closed lists for full marks 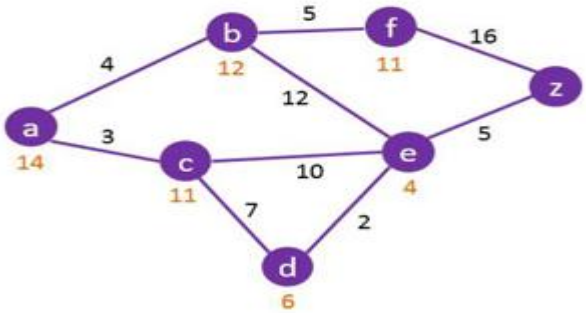	10	CL3
	b.	Considering Wumpus world example give the characteristics and simple knowledge base using propositional logic and **Prove that Wumpus is in the room (1, 3).**	10	CL3
Module 4				
7	a.	List the drawbacks of Propositional Logic. Explain the Syntax and Semantics in First order Logic.	10	CL2
	b.	Define Universal and Existential Instantiation and give examples for both. Prove the following using Forward chaining: "As per the law, it is a crime for an American to sell weapons to hostile nations. Country E, an enemy of America, has some missiles, and all the missiles were sold to it by Solan, who is an American citizen." Prove that "Solan s criminal."	10	CL3
OR				
8	a.	Explain the following with respect to the first order logic: i. Assertions and Queries in First order logic ii. The kinship domain iii. Numbers, sets and lists.	10	CL2
	b.	Considering the digital circuit example illustrate the seven steps in knowledge engineering process.	10	CL2
Module 5				
9	a.	Explain Backward Chaining algorithm with an example.	10	CL2

notesforvtu.in

	b.	Define Classical Planning. With the blocks world example explain the same in detail.	10	CL2
OR				
10	a.	Write appropriate quantifiers for the following (i) Some students read well (ii) Some students like some books (iii) Some students like all books (iv) All students like some books (v) All students like no books Explain the concept of Resolution in First Order Logic with appropriate procedure.	10	CL2
	b.	Explain the two approaches to searching for a plan in detail.	10	CL2

Cognitive Levels of Bloom's Taxonomy

No.	CL1	CL2	CL3	CL4	CL5	CL6
Level	Remember	Understand	Apply	Analyze	Evaluate	Create

notesforvtu.in